INSTALLATION INSTRUCTIONS

PROTECT-A-RAIL® Cab Protector Model 1910 (For Mini Pickups)

IMPORTANT BEFORE YOU BEGIN

Read these instructions and warnings completely before installation.

BOLT KIT

Bolt Kit #32-1910 has been provided with your PROTECT-A-RAIL® Cab Protector. Check this bolt kit to be sure the following parts are included:

Quan.	Description
14	5/16-18 x 1-1/2" Hex Bolt
10	5/16" Lock Washer
17	5/16" Flat Washer
10	5/16-18 Blind Fastener
1	Installation Tool
1	5/16-18 x 2-1/4" Black Oxide Bolt
5	5/16-18 Nylon Lock Nut

PARTS LIST

- 1- PROTECT-A-RAIL® Cab Protector
- 2- "Z" Mounting Brackets
- 2- Reinforcing Brackets

TOOLS REQUIRED

- Electric Drill w/ 3/8" & 1/2" bits
- 1/2" Open or Box End Wrench
- Carpenters Square
- 9/16" Open or Box End Wrench

⚠ CAUTION

To keep debris out of your eyes when checking the underside of the vehicle, or when drilling, always wear protective eyewear.

Approximate Assembly and Installation time:
24 min. per unit (0.4 hrs.) Depending on truck equipment installation experience.

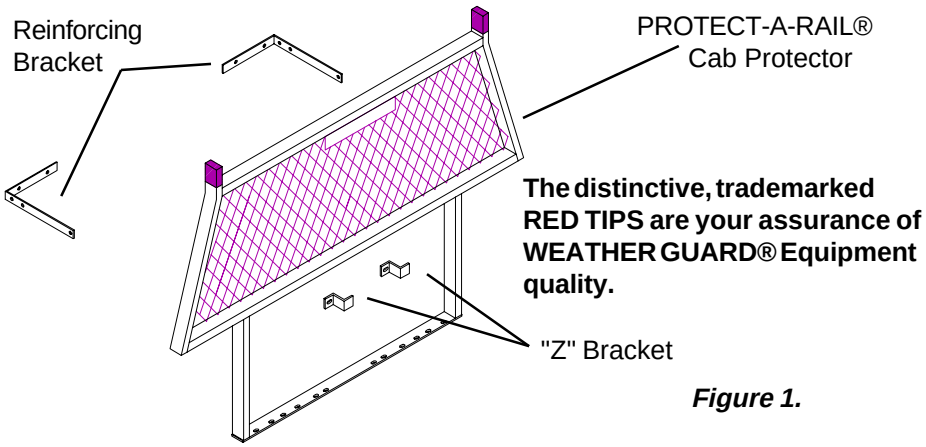

The distinctive, trademarked RED TIPS are your assurance of WEATHER GUARD® Equipment quality.

Figure 1.

⚠ WARNING

This product can reduce the driver's ability to clearly see roadways, vehicular or pedestrian traffic and other objects through the rear and side windows of the vehicle, which may cause an accident. Extra precautions should be taken when driving a vehicle with this product. Make all adjustments necessary to ensure maximum visibility, including but not limited to, changing mirror and seating positions. State and local laws may prohibit obstruction of windows in a moving vehicle.

INSTALLATION INSTRUCTIONS

1. Install two Reinforcing Brackets in front corners of truck bed, as shown in Fig. 2. Place the brackets in position and mark the holes indicated on the bed. Drill four 3/8" holes (per bracket) first, then redrill the four holes in the front of the bed with a 1/2" drill. Install Blind Fasteners in these four holes (Blind Fastener instructions on back page). Secure brackets. **(If the PROTECT-A-RAIL® unit is being installed on a Ford Ranger, do not install the inner most bolts on the Reinforcing Brackets).** (See Fig. 4)

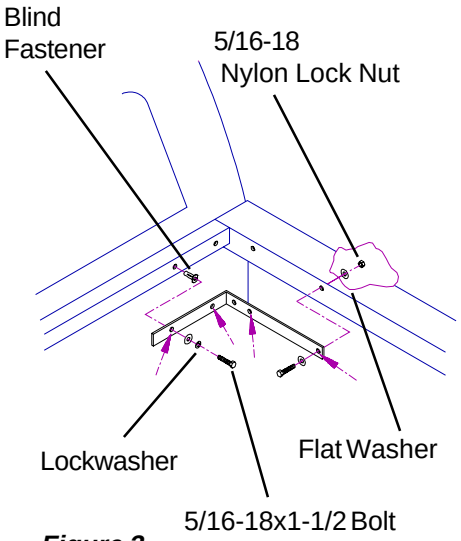

Figure 2.

weather guard®
DIVISION OF KNAACK MFG. CO.

Rev. A 1/01 Part No. 24-0091

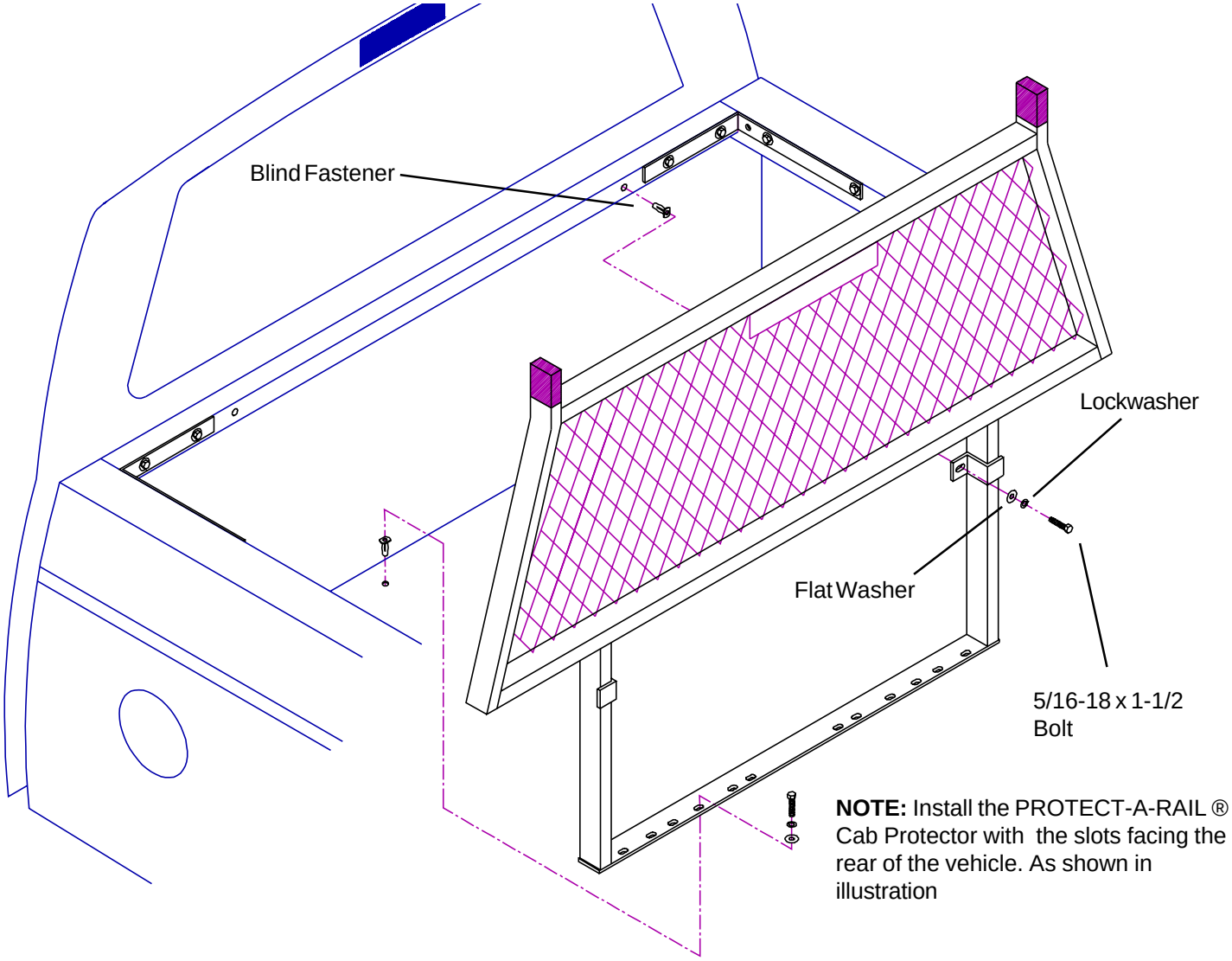

NOTE: Install the PROTECT-A-RAIL ® Cab Protector with the slots facing the rear of the vehicle. As shown in illustration

Figure 3.
Chevy S-10 &
Dodge Dakota
Installation

⚠ WARNING

Prior to drilling, so as not to cut or puncture fuel tanks, fuel lines, brake lines, electric wires, etc., check under vehicle for locations.

⚠ WARNING

All floor mounting bolts near the gas tank area should be installed from the underside of the vehicle, to guard against the gas tank being cut or punctured in the event of a collision. This would mean <u>not</u> using Blind Fastener in this area. Holes drilled in this area should be 3/8".

2. Place the PROTECT-A-RAIL® unit in the pickup bed, against the front wall, centering it from side-to-side. Placethe "Z" Brackets as high on the inside of the leg as they will go and mark through the mounting holes (Chevy and Dodge only) see Fig. 3. The Ford Ranger will use the holes in the Reinforcing Bracket, see Fig. 4 ("Z" Brackets to outside of the legs).

3. Remove the PROTECT-A-RAIL ® unit and brackets and drill the holes in the front bed wall with a 1/2" drill bit. Follow the specific instructions for installation of Blind Fastener on the last page.

4. Replace the PROTECT-A-RAIL® unit and the brackets and install the bolts **Finger Tight Only.**

5. Use the carpenters square against the truck floor and the legs to insure vertical alignment before marking holes in the floor. Mark the four mounting holes that are centered on the top of the floor ribs of your vehicle. After marking, remove the PROTECT-A-RAIL® unit and install the Blind Fasteners as before.

6. Replace PROTECT-A-RAIL® unit into truck and tighten all fasteners.

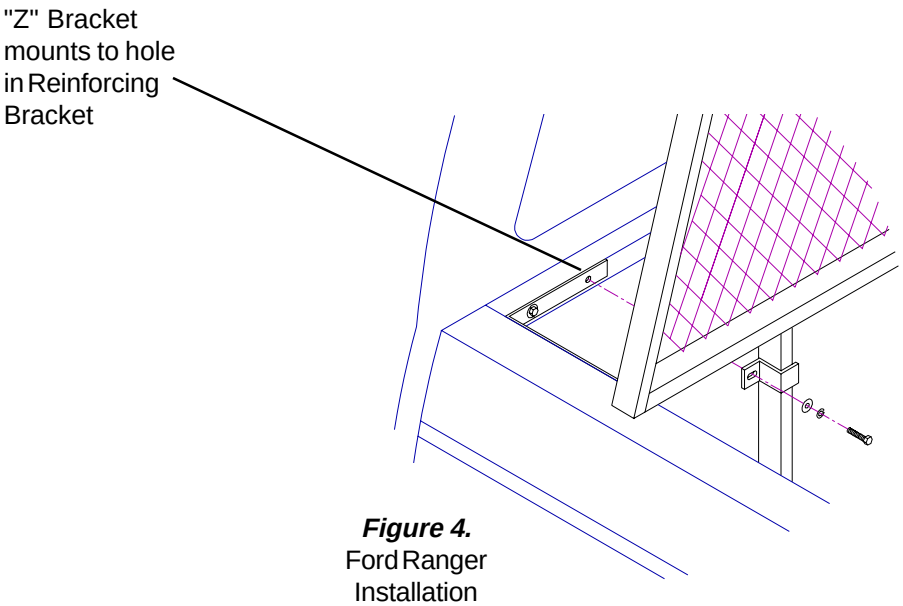

Figure 4.
Ford Ranger Installation

INSTALLATION PROCEDURE USING BLIND FASTENERS

⚠ WARNING

Prior to drilling, so as not to cut or puncture fuel tanks, fuel lines, brake lines, electric wires, etc., check under vehicle for locations.

Place a drop of oil on the black oxide bolt before assembling as shown on right. Place the Blind Fastener in the hole and use a 1/2” or 7/16” wrench to tighten black hex bolt until the blind fastener is fully seated. When setting black hex bolt, it will start out hard. As the Blind Fastener “bulbs” out it will get easier, until it bottoms out or sets. Make sure the Blind Fastener and Installation Tool do not turn during installation.

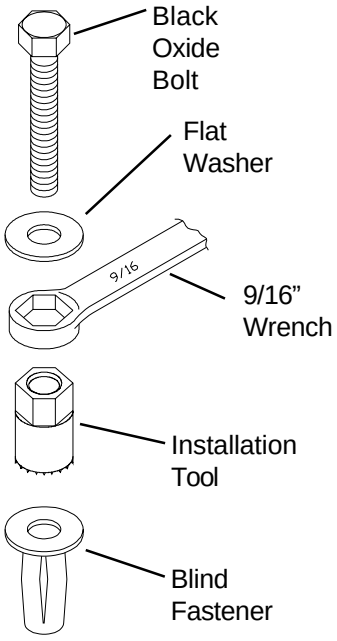

-NOTICE-

Any modification or unintended use of this product shall immediately void all manufacturers warranties. Manufacturer disclaims all liability for injuries to persons or property resulting from any modification to, or unintended use of this product.

If you have any questions, please give us a call. **Call Toll Free 1-800-456-7865**

WEATHER GUARD® products are protected by one or more of the following trademarks:
U.S. - 842268, 1661625, 1663369, 1750034, 2228051, 2291111, 2,362,167; Canada - 282725; U.K. - 1400720;
N.Z.- 296049; AUS. - 761964

KNAACK MANUFACTURING COMPANY

KNAACK MANUFACTURING COMPANY
420 E. TERRA COTTA AVENUE - CRYSTAL LAKE, ILLINOIS, USA 60014
815-459-6020

©2001 Knaack Manufacturing Company