ASSEMBLY AND INSTALLATION INSTRUCTIONS
Ladder Rack - Models 1245 and 1275

Model 1245 - Full Size Pickup Short Beds • Model 1275 - Full Size Pickup Long Beds

Approximate Assembly and Installation Time:
5 hours per unit (5.0 hrs.) depending on truck equipment installation experience.

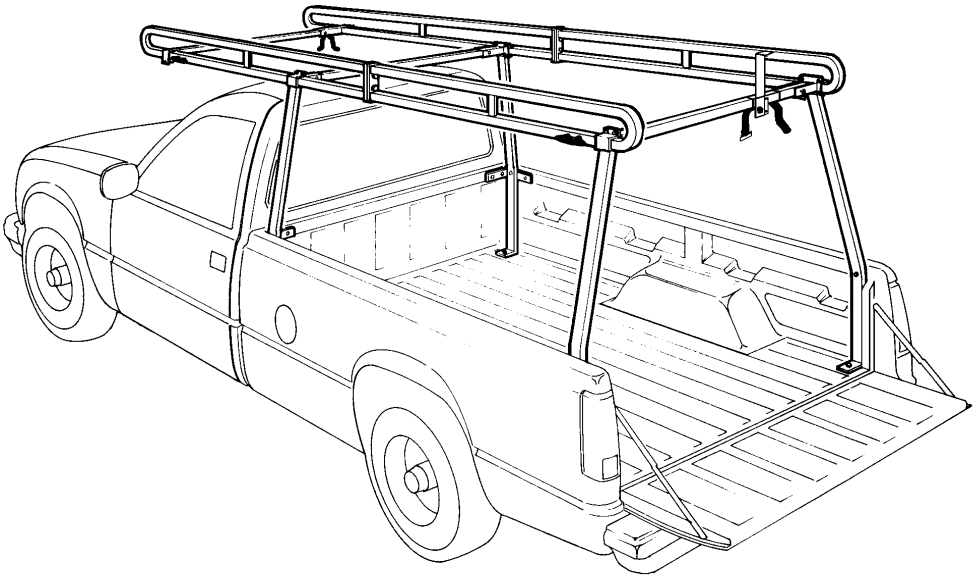

IMPORTANT BEFORE YOU BEGIN

Read these instructions and warnings completely before installing.

BOLT KIT

Bolt Kit #32-0105 is provided with your ladder rack. Check this bolt kit to be sure the following parts are included:

Quan.	Description
4	3/8-16 x 3/4" Hex Head, Thread Cutting
20	5/16-18 Nylon Lock Nut
4	3/8-16 x 1-1/4" Carriage Bolt
4	3/8" Flat Washer
4	3/8-16 Nylon Lock Nut
4	5/16-18 x 2" Hex Hd. Bolt
2	5/16-18 x 2-3/4" Hex Hd. Bolt
12	5/16-18 x 1-1/4" Hex Hd. Bolt
16	5/16-18 x 3/4" Carriage Bolt
34	5/16 Flat Washer
14	5/16" Lock Washer
14	5/16-18 Blind Fastener
1	Installation Tool
2	5/16-18 x 2-1/4" Black Oxide Bolt
2	5/16" x 2-3/4" Latch Pins
4	Black Tie Downs
8	10-24 x 2-3/4" F.H. Screws
8	10-24 Nylon Lock Nuts
2	Sq. Cap Plugs (black)
2	5/16-18 x 2" Carriage Bolt
4	5/16 x 2" Dia. Blk. Oxide Flat Washer

⚠ WARNING

This product is only intended for, and only safe for, transporting ladders, lumber, pipe and other similar materials. It is the responsibility of the user to secure these materials to the rack before transporting. Any modifications made to this product, or use of this product for any other purpose than its intended use, could create a hazardous condition that can cause serious personal injury or property damage.

PARTS LIST

- 4 - Top Rail Halves
- Cushion Strip (bulk)
- 2 - Closed Top Tube Sleeves
- 2 - Open Top Tube Sleeves
- 4 - Legs
- 2 - Crossmembers (open ends)
- 1 - Front Crossmember
- 1 - Front Crossmember Sleeve
- 2 - Bed Reinforcing Brackets
- 2 - Front Leg Spacer
- Tube, Sealant
- 1 - Ladder Stop
- 2 - Straps

TOOLS REQUIRED

- Electric Drill
- Drill Bits - 5/16", 3/8" & 1/2"
- 3/8" Open or Box End Wrench
- 1/2" Open or Box End Wrench (2)
- 9/16" Open or Box End Wrench (2)
- Screwdriver - common
- Framing Square
- Pencil or Marker

Rev.A 12/02 Part No. 24-0132

weather guard®
DIVISION OF KNAACK MFG. CO.

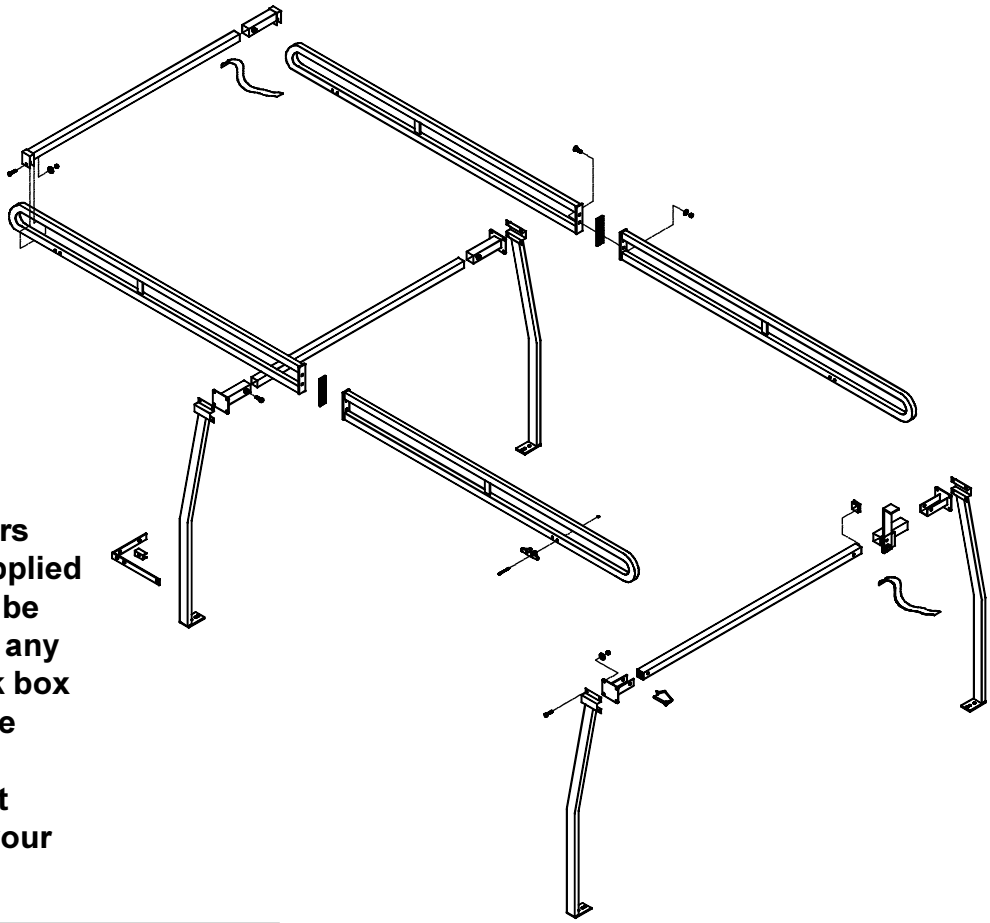

NOTE:
Some vehicle manufacturers require a manufacturer supplied after market reinforcing kit be installed prior to mounting any kind of ladder rack or truck box on your vehicle. Kits can be purchased from your local vehicle dealership. Contact your local dealer to see if your vehicle is effected.

STEP 1. Bolt front and rear rail halves together (two bolts per rail).

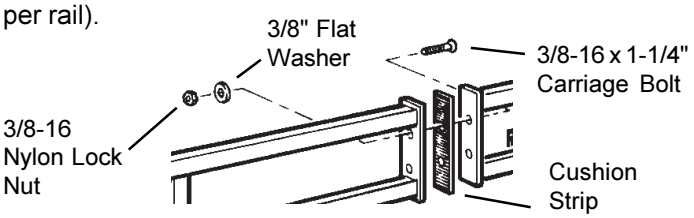

STEP 2. Attach all legs and sockets. Do not tighten. (Four bolts required per leg)

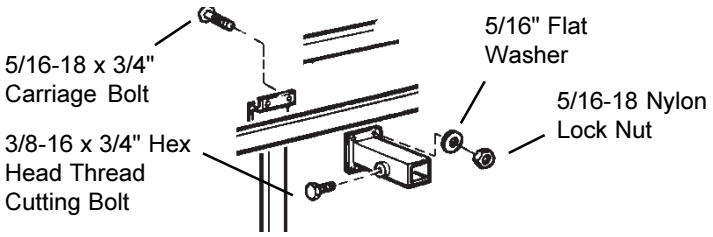

STEP 3. Assemble front crossmember.
Turn crossmember upside down for clearance on king cabs.

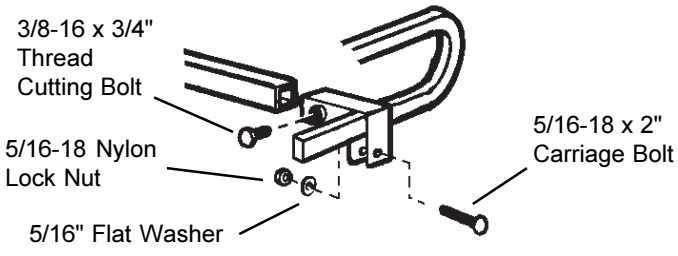

⚠ CAUTION

To keep debris out of your eyes when checking the underside of the vehicle, or when drilling, always wear protective eyewear.

⚠ CAUTION

Never load your rack to exceed the safe rated capacity of your vehicle. Heavy loads carried high can dangerously alter the center of gravity.

STEP 4. Check width of rack and truck bed. If rack is narrower, clamp rear crossmember in rear open sockets temporarily, but DO NOT drill, proceed to Step 5. If the rack is too wide, remove rear cross-member and cut to fit. **Note -** Double check all measurements before cutting.

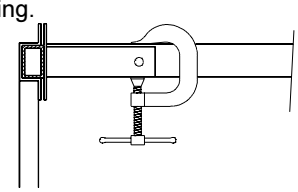

⚠ WARNING

All floor mounting bolts near the gas tank area should be installed from the underside of the vehicle, to guard against the gas tank being punctured in the event of a collision. This would mean not using Blind Fasteners in this area.

⚠ WARNING

Prior to drilling, so as not to cut or puncture fuel tanks, fuel lines, brake lines, electric wires, etc., check under vehicle for locations.

STEP 5. If the manufacturers reinforcing kit is not required on your vehicle, install two Bed Reinforcing Brackets.
See Blind Fastener instructions for installation.

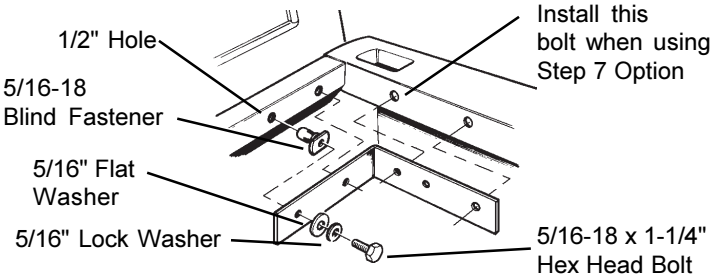

STEP 6. Rear leg installation.
For maximum strength, the rear legs must be bolted to the tailgate stops (as shown).

A) Before drilling leg mounting holes, use a framing square to insure accuracy of alignment.

B) Fasten leg to floor and leg to side.

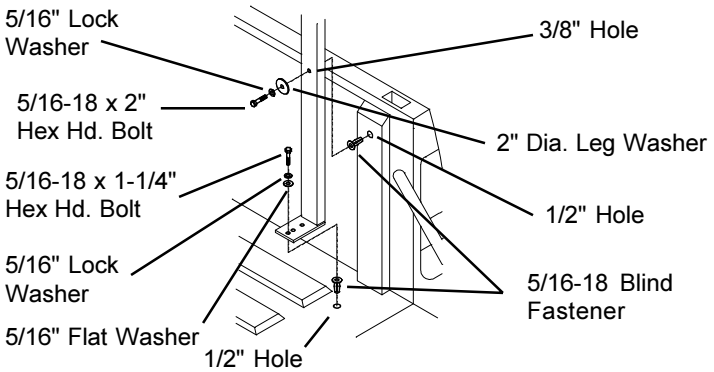

STEP 7. Front leg installation.
(See STEP 7. Option for installation due to obstructions in the bed floor.)

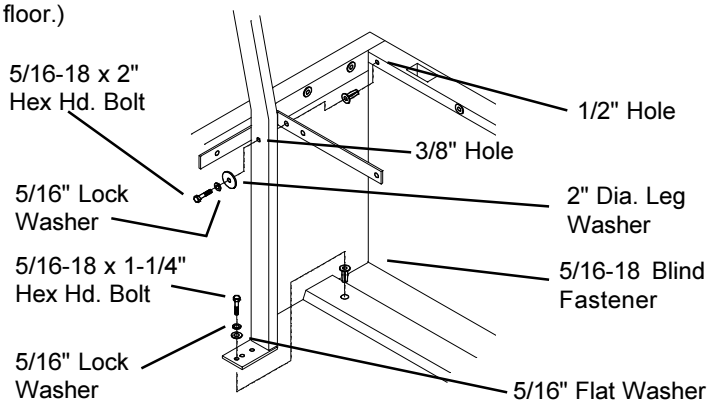

STEP 7. Option - Front Leg Spacers are provided.

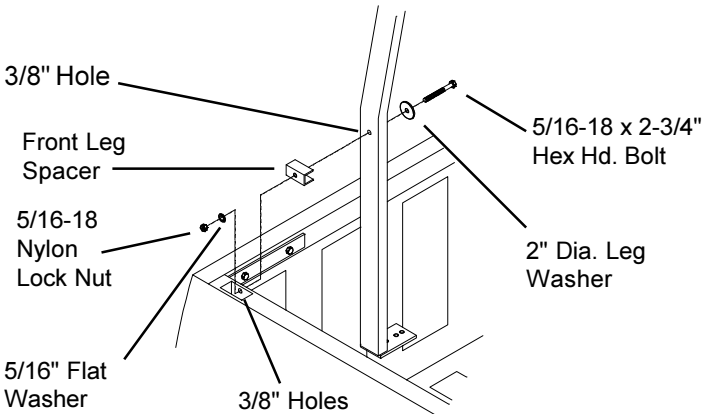

STEP 8. Tightening fasteners.
Tighten all nuts and bolts in the following order:

- First - leg bolts. Tighten evenly so crossmember sleeves stay parallel. (Start with rear legs)
- Second - top of legs to rails, center and rear. Make sure bolts are evenly tightened.
- Third - crossmembers (center and front only).

STEP 9. Rear Crossmember.
Drill a 3/8" hole through the sleeve and crossmember to accept the insertion of the Latch Pin. The wire loop of the latch pin swings around the sleeve and over the end of the pin.

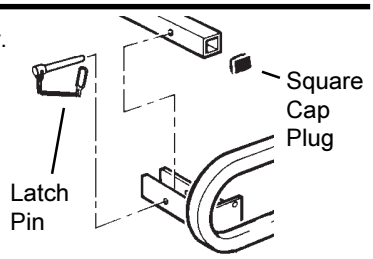

STEP 10. Tie Downs.
Install four Tie Downs where desired. We suggest putting sealant on the back of the tie downs and under nuts before installing.

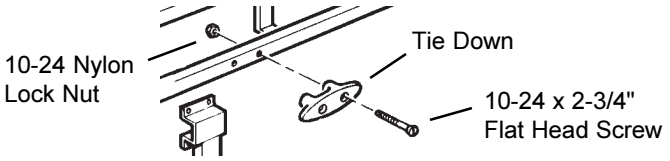

STEP 11. Ladder Stop.
Remove rear Crossmember and slide Ladder Stop onto it. Install Crossmember on rack. With a Ladder on the rack, locate the Ladder Stop inside of the ladder and then secure. Insert a strap through the loop on the Ladder Stop and on the front Crossmember Socket. **Refer to the warning decal on the Ladder Stop.**

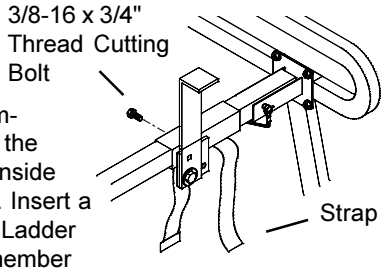

STEP 12. Sealant.
Seal all nuts, bolts, and crossmember to sleeve seam with sealant.

WARRANTY WILL BE VOID IF SEALANT IS NOT APPLIED TO ALL SEAMS AND CREVICES

INSTALLATION PROCEDURE USING BLIND FASTENERS

⚠ WARNING

Prior to drilling, so as not to cut or puncture fuel tanks, fuel lines, brake lines, electric wires, etc., check under vehicle for locations.

Place a drop of oil on the black oxide bolt before assembling as shown on right. Place the Blind Fastener in the hole and use a 1/2" or 7/16" wrench to tighten black hex bolt until the blind fastener is fully seated. When setting black hex bolt, it will start out hard. As the Blind Fastener "bulbs" out it will get easier, until it bottoms out or sets. Make sure the Blind Fastener and Installation Tool do not turn during installation.

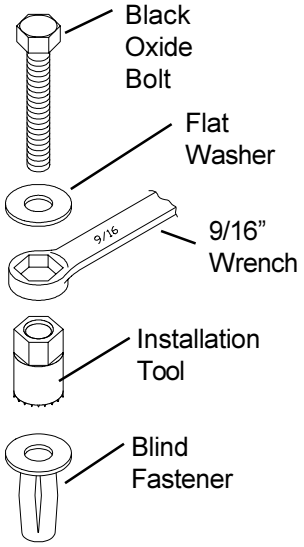

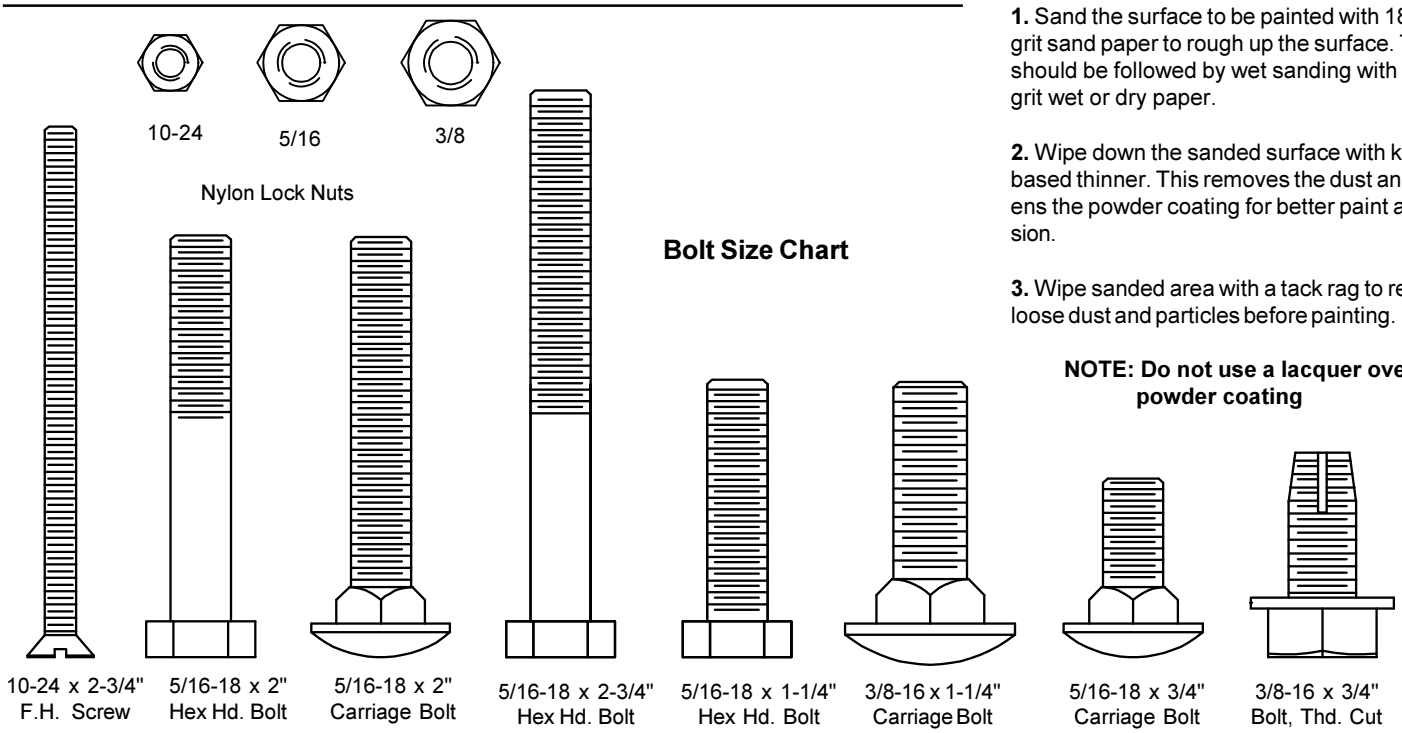

⚠ WARNING

Ladders must be secured per ANSI standard A142.2-1990 paragraph 8.4.4. Ladder damage will occur from road shock and vehicle vibration if the ladder is not properly secured to the ladder rack. Bouncing and side to side motion of a improperly secured ladder will cause wear and weaken the ladder. Using a damaged ladder could lead to a structural collapse and could result in a serious injury or death.

WEATHER GUARD® PRODUCT REFINISHING PROCEDURES

All WEATHER GUARD® products are finished with a polyester powder coating, and it is important to follow these procedures to get proper adhesion. As Knaack Manufacturing Co. cannot control the finishing of the products, the warranty for WEATHER GUARD® products on paint is not applicable on refinished products.

1. Sand the surface to be painted with 180-200 grit sand paper to rough up the surface. This should be followed by wet sanding with a 400 grit wet or dry paper.

2. Wipe down the sanded surface with ketone based thinner. This removes the dust and softens the powder coating for better paint adhesion.

3. Wipe sanded area with a tack rag to remove loose dust and particles before painting.

NOTE: Do not use a lacquer over the powder coating

- NOTICE -

Any modification or unintended use of this product shall immediately void all manufacturers warranties. Manufacturer disclaims all liability for injuries to persons or property resulting from any modification to, or unintended use of this product.

If you have any questions, please give us a call. **Call Toll Free 1-800-456-7865**

WEATHER GUARD® products are protected by one or more of the following patents or trademarks:
U.S. - 4509787, 842268, 1661625, 1663369, 2228051, 2434963; Canada - 1218968, 282725; U.K. - 1400720; NZ - 296049; Aus.- 761964

KNAACK MANUFACTURING COMPANY
KNAACK MANUFACTURING COMPANY
420 E. TERRA COTTA AVENUE - CRYSTAL LAKE, ILLINOIS, USA 60014 - 815-459-6020
EMERSON Professional Tools

© 2002 Knaack Manufacturing Company