ASSEMBLY AND INSTALLATION INSTRUCTIONS
Ladder Rack - Models 1345 and 1375

[Model 1345 - Mini Truck Beds • Model 1375 - Dodge Dakota 8 foot Bed]

IMPORTANT BEFORE YOU BEGIN

Read these instructions and warnings completely before assembly.

Approximate Assembly and Installation Time:
5 hours per unit (5.0 hrs)
Depending on Truck equipment installation experience

NOTE: Installation time will be longer if you have a bedliner or bedmat.

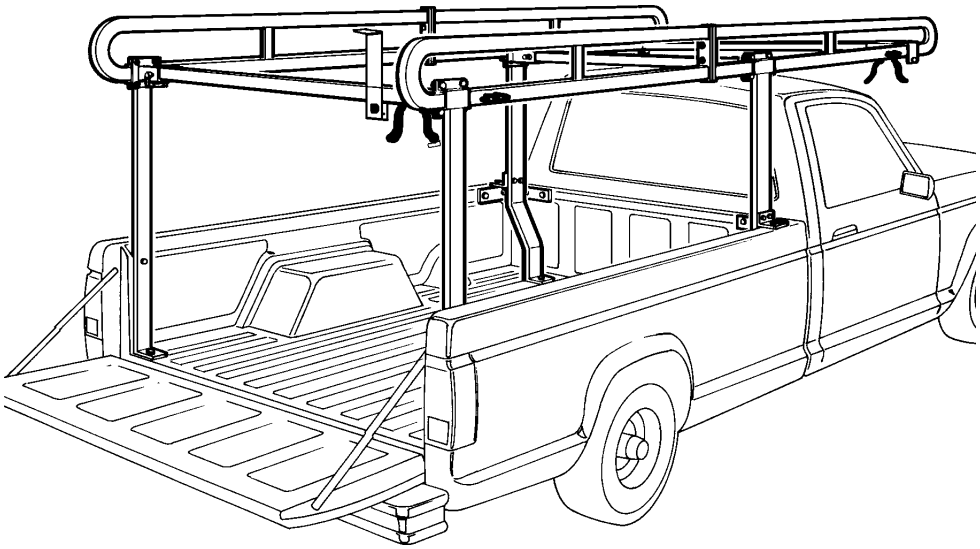

BOLT KIT

Bolt Kit #32-1275 is provided with your ladder rack. Check this bolt kit to be sure the following parts are included:

Quan.	Description
4	3/8-16 x 3/4" Hex Head, Thread Cutting
24	5/16-18 Nylon Lock Nut
4	3/8-16 x 1-1/4" Carriage Bolt
4	3/8" Flat Washer
4	3/8-16 Nylon Lock Nut
4	5/16-18 x 2" Hex Hd. Bolt
16	5/16-18 x 1-1/4" Hex Hd. Bolt
16	5/16-18 x 3/4" Carriage Bolt
42	5/16" Flat Washer
18	5/16" Lock Washer
18	5/16-18 Blind Fastener
1	Installation Tool
2	5/16-18 x 2-1/4" Black Oxide Bolt
2	5/16" x 2-3/4" Latch Pins
4	Black Tie Downs
8	10-24 x 2-3/4" F.H. Screws
8	10-24 Nylon Lock Nuts
2	Sq. Cap Plugs (black)
6	5/16-18 x 2" Carriage Bolt
4	2" Diameter Leg Washers

⚠ WARNING

This product is only intended for, and only safe for, transporting ladders, lumber, pipe and other similar materials. It is the responsibility of the user of this rack to secure these materials to the rack before transporting. Any modifications made to this product, or use of this product for any other purpose than its intended use, could create a hazardous condition that can cause serious personal injury or property damage.

PARTS LIST

- 4- Top Rail Halves
- Cushion Strip (bulk)
- 2- Closed Top Tube Sleeves
- 2- Open Top Tube Sleeves
- 2- Legs, Straight
- 2- Legs, Double Bend
- 2- Crossmembers (open ends)
- 1- Front Crossmember
- 1- Front Crossmember Sleeve
- 2- Bed Reinforcing Brackets
- 2- Front Leg Spacer
- 1- Ladder Stop
- 2- Straps
- Tube, Sealant

TOOLS REQUIRED

- Electric Drill
- 7/32", 5/16", 3/8", 1/2" Drill Bits
- 1/2" Open or Box End Wrench (2)
- 9/16" Open or Box End Wrench (2)
- 3/8" Open or Box End Wrench
- Screwdriver, common
- Framing Square
- Pencil or Marker

Rev. 12/02 Part No. 24-0134

weather guard®
DIVISION OF KNAACK MFG. CO.

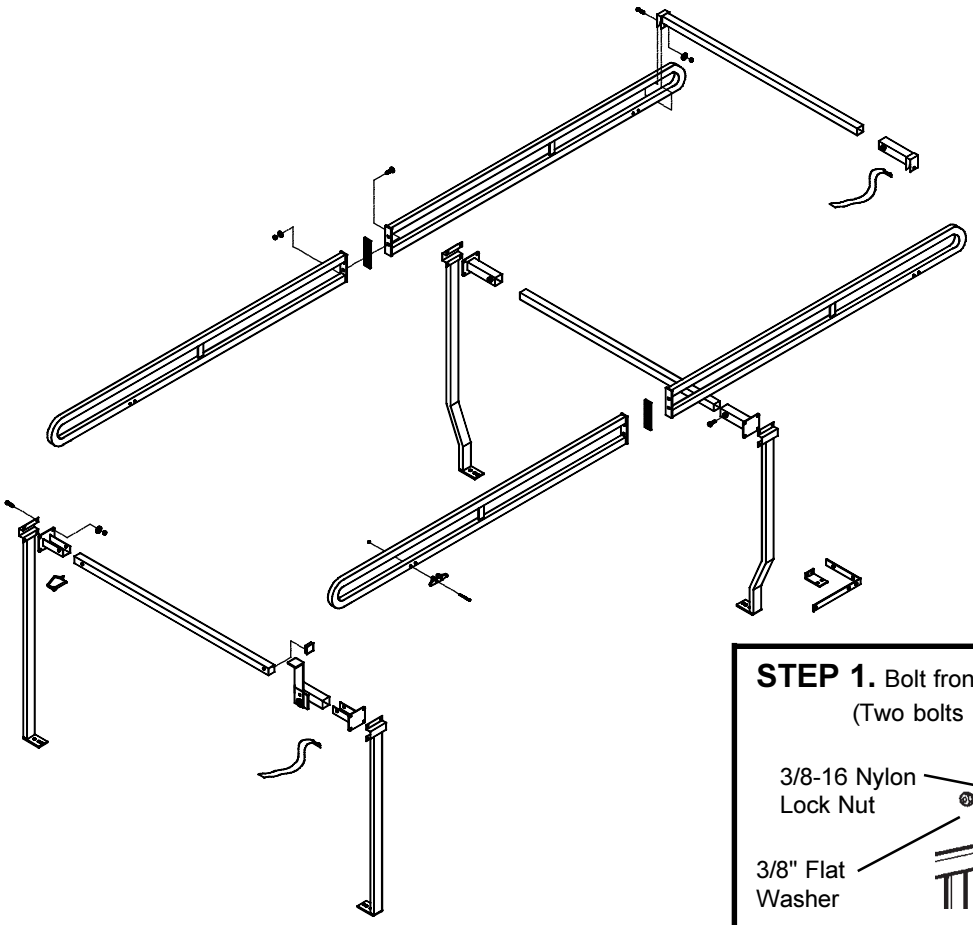

⚠ CAUTION

To keep debris out of your eyes when checking the underside of the vehicle, or when drilling, always wear protective eyewear.

⚠ CAUTION

Never load your ladder rack to exceed the safe rated capacity of your vehicle. Heavy loads carried high can seriously alter the center of gravity.

STEP 1. Bolt front and rear rail halves together. (Two bolts per rail)

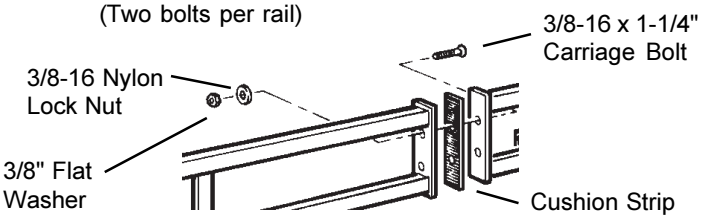

STEP 2. Attach all legs and sockets. Do not tighten. Insert center crossmember. (Four bolts required per leg)

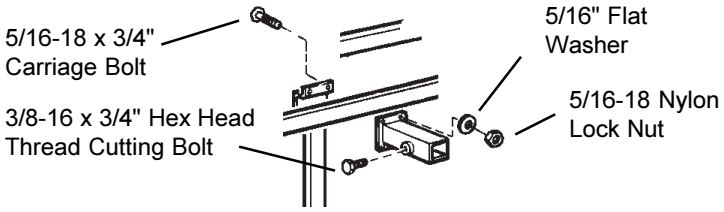

STEP 3. Assemble front crossmember.

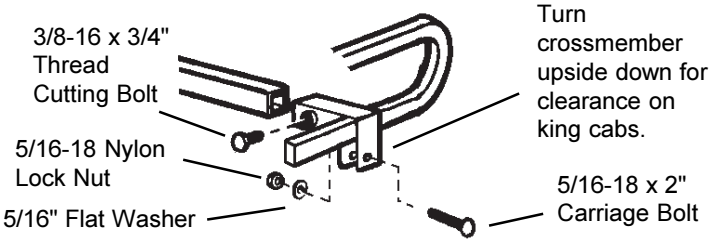

STEP 4. Check the width of the rack and the truck bed. If the rack is narrower, clamp the rear crossmember in the rear open sockets temporarily, but DO NOT drill, then proceed to Step 5. If the rack is too wide, remove the crossmembers and cut to fit.
NOTE: Double check all of your measurements before cutting.

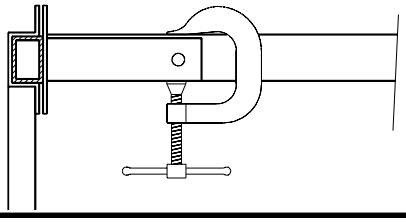

STEP 5. Install two Bed Reinforcing Brackets. See Blind Fastener instructions for Blind Fastener installation.

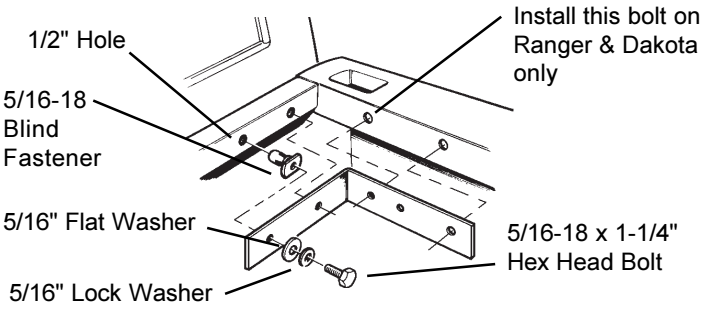

⚠ WARNING

All floor mounting bolts near the gas tank area should be installed from the underside of the vehicle, to guard against the gas tank being punctured in the event of a collision. This would mean not using Blind Fasteners in this area.

⚠ WARNING

Prior to drilling, so as not to cut or puncture fuel tanks, fuel lines, brake lines, electric wires, etc., check under vehicle for locations.

STEP 6. Rear leg installation.
Some trucks require fastening the leg to the tailgate stop, as shown. Others bolt directly to the bed side flange. Procedures are the same for both.

A) Before drilling leg mounting holes, use a framing square to insure accuracy of alignment.

B) Fasten leg to floor and leg to side.

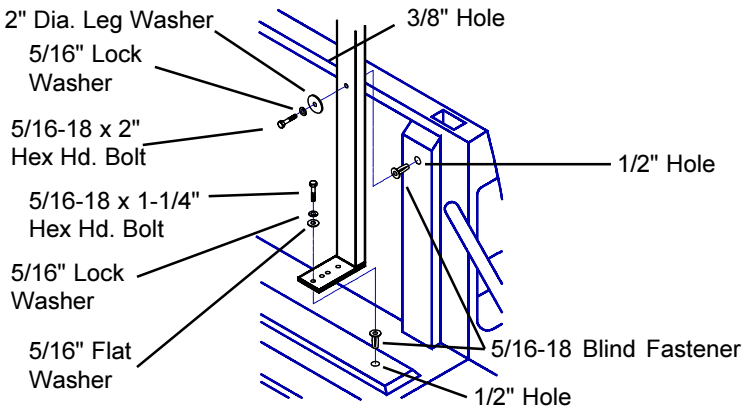

STEP 7. Front leg installation (See STEP 7. Option for Ford Ranger installation).

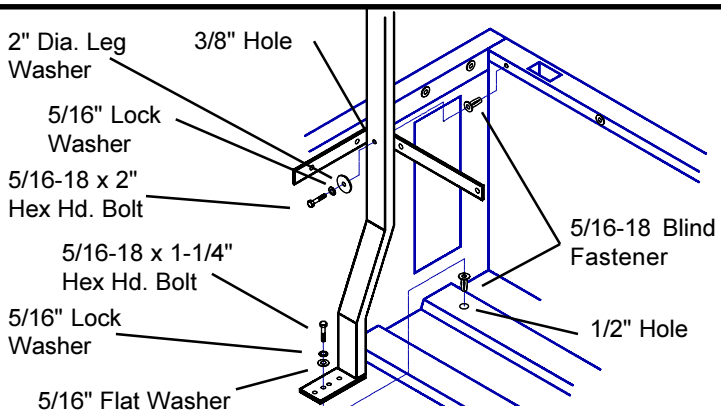

STEP 7. Option - This method applies only to **Ford Ranger** with the fuel filler bump in the floor.
Front Leg Spacers are provided.

A) Front legs on the Ford Ranger should be inset approximately 1". On these trucks, tailgate stops at the rear of the bed prevent mounting rear rack legs to truck side rail. To keep the rack rectangular and parallel, all legs are inset from the side rail. Square the ladder rack to the truck and inset the front legs to the dimensions previously mentioned for your truck.

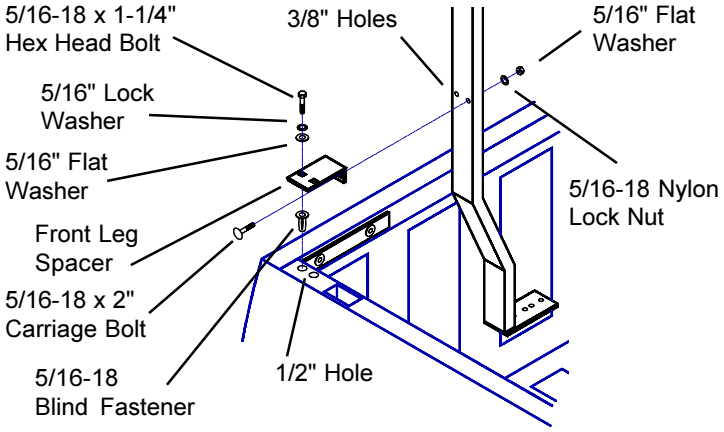

STEP 8. Tightening fasteners.
Tighten all of the nuts and bolts in the following order:

- First - leg bolts. Tighten evenly so crossmember sleeves stay parallel. (Start with rear legs)
- Second - top of legs to rails, center and rear). Make sure bolts are evenly tightened.
- Third - crossmembers (center and front only).

STEP 9. Rear Crossmember.
Drill a 3/8" hole through the sleeve and crossmember to accept the insertion of the Latch Pin. The wire loop of the latch pin swings around the sleeve and over the end of the pin.

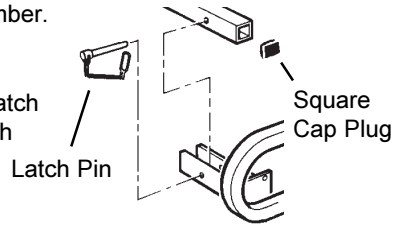

STEP 10. Tie Downs.
Install four Tie Downs where desired. We suggest putting sealant on the back of the tie downs and under nuts before installing.

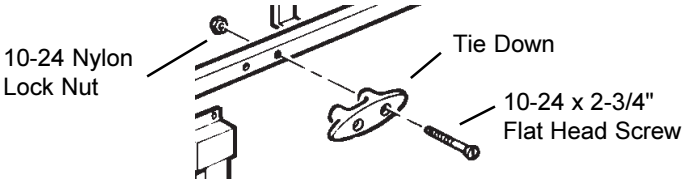

STEP 11. Ladder Stop.
Remove rear Crossmember and slide Ladder Stop onto it. Install Crossmember on rack. With a Ladder on the rack, locate the Ladder Stop inside of the ladder and then secure. Insert a strap through the loop on the Ladder Stop and on the front Crossmember Socket. **Refer to the warning decal on the Ladder Stop.**

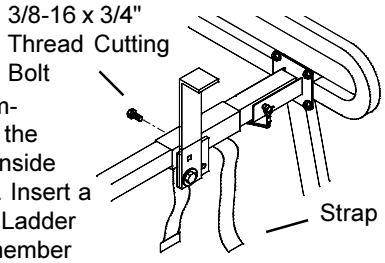

STEP 12. Sealant.
Seal all nuts, bolts, and crossmember to sleeve seam with sealant.

WARRANTY WILL BE VOID IF SEALANT IS NOT APPLIED TO ALL SEAMS AND CREVICES

INSTALLATION PROCEDURE USING BLIND FASTENERS

⚠ WARNING

Prior to drilling, so as not to cut or puncture fuel tanks, fuel lines, brake lines, electric wires, etc., check under vehicle for locations.

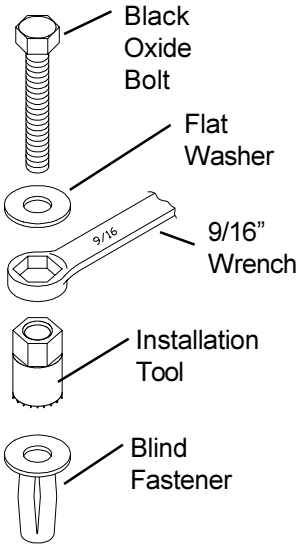

Place a drop of oil on the black oxide bolt before assembling as shown on right. Place the Blind Fastener in the hole and use a 1/2" or 7/16" wrench to tighten black hex bolt until the blind fastener is fully seated. When setting black hex bolt, it will start out hard. As the Blind Fastener "bulbs" out it will get easier, until it bottoms out or sets. Make sure the Blind Fastener and Installation Tool do not turn during installation.

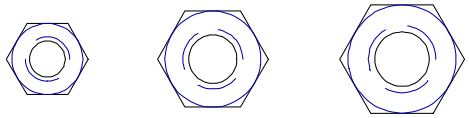

Nylon Lock Nuts

Bolt Size Chart

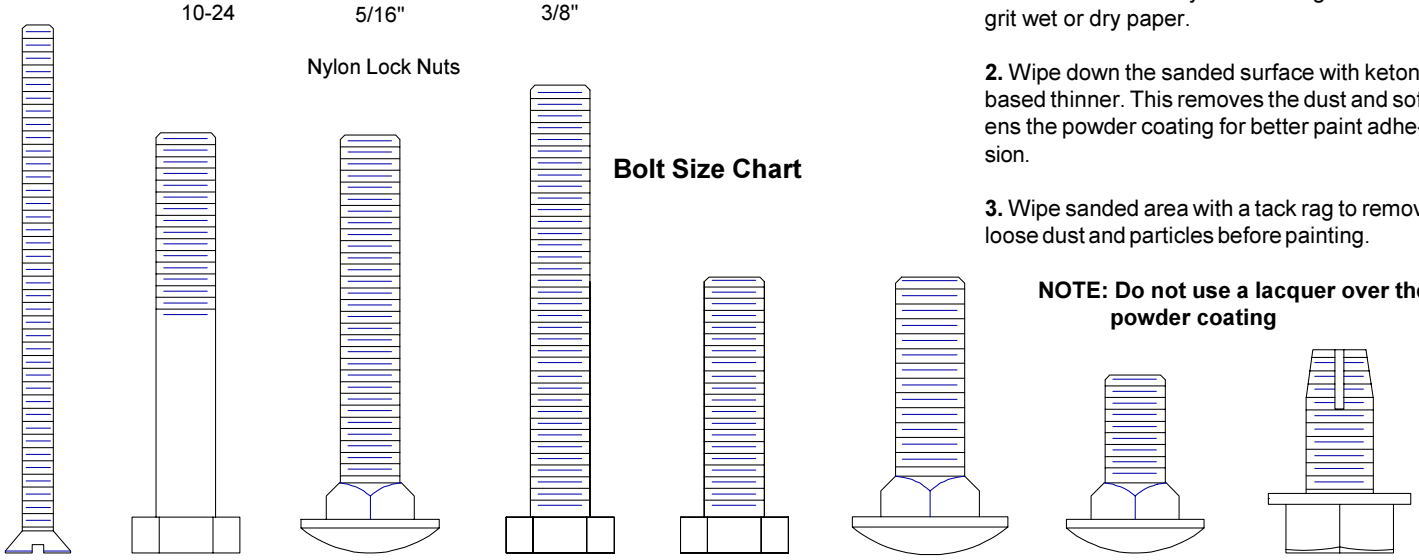

10-24 x 2-3/4" F.H. Screw	5/16-18 x 2" Hex Hd. Bolt	5/16-18 x 2" Carriage Bolt	5/16-18 x 2-1/4" Hex Hd. Bolt	5/16-18 x 1-1/4" Hex Hd. Bolt	3/8-16 x 1-1/4" Carriage Bolt	5/16-18 x 3/4" Carriage Bolt	3/8-16 x 3/4" Bolt, Thd. Cut

⚠ WARNING

Ladders must be secured per ANSI standard A142.2-1990 paragraph 8.4.4. Ladder damage will occur from road shock and vehicle vibration if the ladder is not properly secured to the ladder rack. Bouncing and side to side motion of a improperly secured ladder will cause wear and weaken the ladder. Using a damaged ladder could lead to a structural collapse and could result in a serious injury or death.

WEATHER GUARD® PRODUCT REFINISHING PROCEDURES

All WEATHER GUARD® products are finished with a polyester powder coating, and it is important to follow these procedures to get proper adhesion. As Knaack Manufacturing Co. cannot control the finishing of the products, the warranty for WEATHER GUARD® products on paint is not applicable on refinished products.

1. Sand the surface to be painted with 180-200 grit sand paper to rough up the surface. This should be followed by wet sanding with a 400 grit wet or dry paper.

2. Wipe down the sanded surface with ketone based thinner. This removes the dust and softens the powder coating for better paint adhesion.

3. Wipe sanded area with a tack rag to remove loose dust and particles before painting.

NOTE: Do not use a lacquer over the powder coating

- NOTICE -

Any modification or unintended use of this product shall immediately void all manufacturers warranties. Manufacturer disclaims all liability for injuries to persons or property resulting from any modification to, or unintended use of this product.

If you have any questions, please give us a call. **Call Toll Free 1-800-456-7865**

WEATHER GUARD® products are protected by one or more of the following patents or trademarks:
U.S. - 842268, 1661625, 1663369, 2228051, 4509787; Canada - 282725, 1218968; U.K. - 1400720; N.Z. - 296049; Aus.-761964

KNAACK MANUFACTURING COMPANY

KNAACK MANUFACTURING COMPANY
420 E. TERRA COTTA AVENUE - CRYSTAL LAKE, ILLINOIS, USA 60014 - 815-459-6020

©2001 Knaack Manufacturing Company

EMERSON Professional Tools