weather guard®

TRUCK AND VAN EQUIPMENT

OPERATORS MANUAL

STEEL & ALUMINUM ALL-PURPOSE CHEST

MODELS 644-X-01 THRU 685-X-01

WWW.WEATHERGUARD.COM

PRODUCT REGISTRATION

Model #:_____ Serial #:_____

For your convenience, place product registration tear-off sticker here

Purchase Date: _____

Place of Purchase: _____

Key Code: _____

INSTALLATION TIME

Approximate installation time: 45 minutes (depending on truck equipment installation experience)

TOOLS REQUIRED

- Drill
- 3/8” Drill Bit
- 1/2” Drill Bit
- 1/2” Open or Box End Wrench (qty. 2)
- 9/16” Open or Box End Wrench
- Hammer
- Center Punch
- Tape Measure
- Pencil or Marker
- Oil / Grease

PARTS LIST

(1) All-Purpose Chest 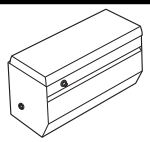	(1) 5/16” - 18 x 2 1/4” Black Oxide Hex Head Bolt 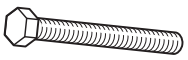	(1) 5/16” - 18 Blind Fastener
(1) Tray w/Dividers (except model #644 & 645) 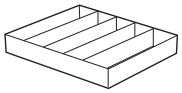	(4) 5/16” - 18 x 1 1/4” Hex Head Bolt	(1) 5/16” Lock Washer
(2) Key 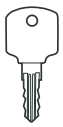	(4) 5/16” - 18 Nylon Lock Nut	(4) Floor Spacer 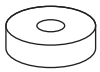
(1) Installation Tool 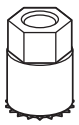	(8) 5/16” Flat Washer	(4) Rubber Grommet

–ATTENTION–

Read and understand all instructions and warnings before operating or using this product.

⚠ DANGER

Danger of explosion. Do not use this product for storing or transporting flammables, explosives, hazardous materials, or hazardous waste, such as containers of gasoline, solvents, gun powder, dynamite, propane tanks, acetylene tanks and cutting torches. This product is only intended and safe for use in storing and transporting small tools, equipment and other similar materials. Any modifications made to, or unintended use of this product, could create a hazardous condition that can cause death, serious personal injury or property damage.

Part No. 24-0198

⚠ CAUTION

Before marking the leg mounting holes, check inside the box for location of gas spring housing and components that may obstruct safe drilling.

⚠ CAUTION

To keep debris out of your eyes when checking the underside of the vehicle, or when drilling, always wear eyewear.

⚠ WARNING

Prior to drilling, so as not to cut or puncture fuel tanks, fuel lines, brake lines, electric wires, etc., check under vehicle for locations.

⚠ WARNING

All floor mounting bolts near the gas tank area should be installed from the underside of the vehicle, to guard against the gas tank being punctured in the event of a collision. This would mean not using Blind Fastener in this area. Holes drilled in this area should be 3/8".

INSTALLATION INSTRUCTIONS

Note:

- If your pickup is fitted with a plastic drop-in bed liner, it may need to be drilled, trimmed, or cut for proper installation of truck box.
- Truck box cover may not properly latch until box is fully bolted to truck bed.
- Periodically check tightness of mounting bolts to insure proper attachment.
- Use touch-up paint on any drill holes to prevent oxidation.
- Install boxes with vehicle parked on level ground.

Step 1: LOCATE BOX IN TRUCK BED

- Place box in truck bed and center. Check for interference with box cover open.
- Select two ribs in truck bed to mount box to (preferably outside of frame rails).
- Measure from middle of selected rib to truck box end (dimension "X" in fig. 1).
- Transfer dimension "X" to inside of both sides of truck box.
- Mark a line 3" - 4" from front and back on inside of truck box.

Note: Fasten truck box directly to bed floor, not bed liners or mats.

Step 2: DRILL MOUNTING HOLES

- Drill 3/8" holes through box and truck bed at marked locations.

Note: One "Blind Fastener" and one 5/16" Lock Washer have been provided for use in areas where standard fasteners can't be used, such as heat shields and support channels. In this case, re-drill this hole with 1/2" drill bit.

- Install (4) rubber grommets into holes in the box.

Note: A drop of oil or grease should be applied to both faces of grommets before tightening the fasteners to prevent grommets from binding on washers.

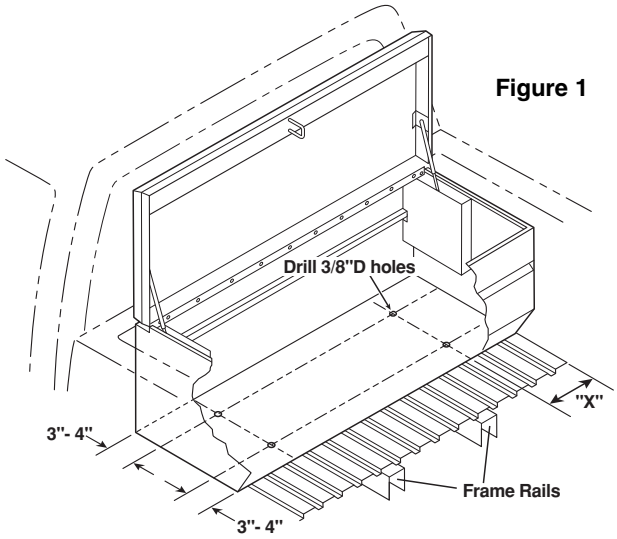

Figure 1

Step 3: ATTACHING ALL-PURPOSE CHEST TO TRUCK BED

Select 1 of 4 mounting styles that fits your application:

Style 1: No bed-liner using through bolts

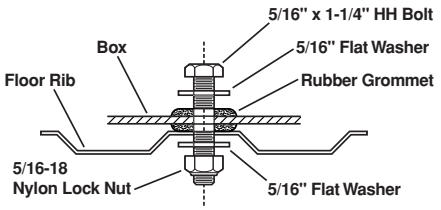

Style 2: Bed-Liner using through bolts

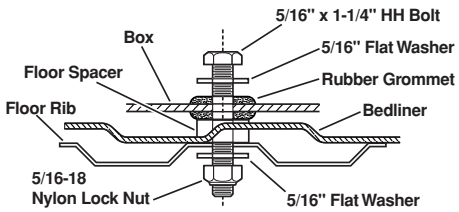

Style 3: No bed-liner using blind fastener

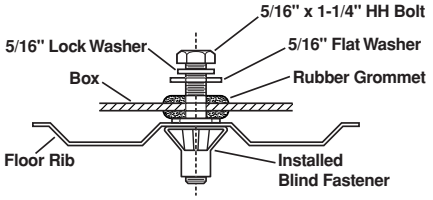

Style 4: Bed-liner using blind fastener

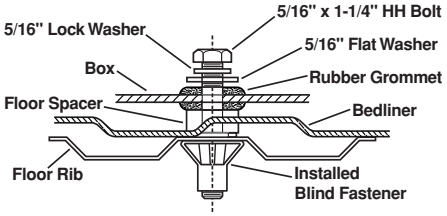

BLIND FASTENER INSTALLATION

Note: Make sure there is enough hole depth before installing the Blind Fastener.

Note: Black Oxide Bolt, Flat Washer, and Installation Tool are only used to install Blind Fasteners.

- Install Blind Fastener using Fig. 2 as a guide.
- Place a drop of oil on black oxide bolt for lubrication.
- Insert Blind Fastener in the hole.
- Hold the “Installation Tool” with a 9/16” wrench while turning the “Black Oxide Bolt” with a 1/2” wrench until fully seated.
- Turning “Black Oxide Bolt” will be hard until fastener “bulbs” out.
- When Blind Fastener is fully seated, continue with installation.

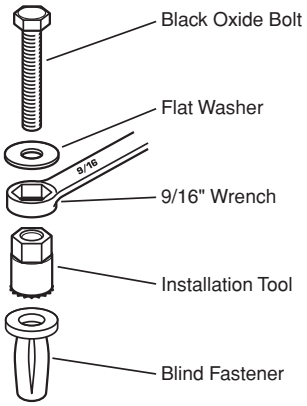

Figure 2

FEATURE OPERATION

NEW!

LOCK SYSTEM

The WEATHER GUARD® Extreme Protection™ Lock is designed to provide maximum security, while providing ease of use and years of reliable service. When in the locked mode, the button remains retracted in a tamper-resistant position. When the button is pressed in the unlock mode, the latches are activated and the cover opens.

LOCK

Turn key counterclockwise to locked position as indicated on lock bezel. When the button is now pressed, it will stay in the retracted or tamper-resistant position until unlocked.

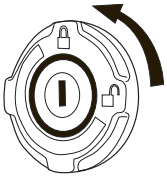

UN-LOCKED

Turn key clockwise to unlock position as indicated on the lock bezel. Button will pop out and is now ready to release the latches when pressed.

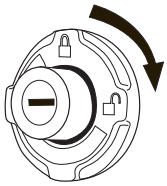

NEW!

LATCH SYSTEM

The WEATHER GUARD Latch System utilizes an automotive grade latch in conjunction with a high strength latch striker to ensure maximum security. The WEATHER GUARD Latch System is designed to open with a single touch of the button, and close securely. Expect years of reliable service from the WEATHER GUARD Latch System with only minimal maintenance: Biannually lubricate latch pivot points with white grease. If latch striker is accidentally knocked out of alignment, simply use a mallet to realign.

NEW!

12V ELECTRICAL ACCESS

WEATHER GUARD truck boxes are equipped with a 12 Volt Electrical Access Plug for easy electrical accessory upfits. To use, simply cut along one or more perforations in the rubber grommet and run wire through.

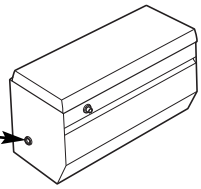

Figure 3

⚠ WARNING

To prevent electric shock, explosion, fire and/or serious personal injury when using All-Purpose Chest with:

Extension Cord -

- Follow all extension cord manufacturer’s warnings and instructions.
- Do NOT insert extension cord through hole without grommet in place (see Figure 3).
- Only use a three-wire extension cord with all three prongs intact. Never remove the round grounding prong.
- Extension cord must be connected to a 120 Volt GFCI protected outlet with proper ground. If GFCI outlet is not available, use an extension cord with GFCI protection built in.
- Check the insulation and plugs of extension cord before using. Do NOT use cord if it is worn or damaged.
- Do NOT overload extension cord.
- Remove extension cord from the grommet hole before moving or transporting All-Purpose Chest.
- Only use an extension cord that is rated for outdoor use.
- Do NOT connect extension cord to outlet that also supplies critical safety equipment with power.

Cordless Power Tool Battery Chargers -

- See charger’s owner’s manual for proper use and care of charger and batteries. Follow all warnings and instructions provided with your battery charger.
- Place chargers and electrical connections in tray.
- Chargers are dry location use only. Do NOT expose to liquid, vapor, or rain. Should your charger become wet, Do NOT attempt to use. Unplug extension cord from supply before handling wet charger or cords.
- Only use chargers and batteries that are intact and operating properly.
- Do NOT touch metal prongs when plugging charger into extension cord.
- Keep flammable materials like paper or rags away from charger, cords or connections.
- Do NOT place or attempt to charge lead acid, car type batteries in All-Purpose Chest.

SERVICE PARTS

FOR REPLACEMENT PARTS GO TO WWW.WEATHERGUARD.COM

ITEM NO.	PART NO.	DESCRIPTION	FITS MODEL #
1	7096	**Gas Spring**	665-X-01
1	7095	**Gas Spring**	644-X-01, 645-X-01, 654-X-01, 655-X-01, 664-X-01, 665-X-01, 674-X-01, 675-X-01
1	7902	**Gas Spring**	684-X-01
1	7904	**Gas Spring**	685-X-01
2	7748-xx	**Lock & Key Set** (xx = key code) (1 lock, 2 keys, retainer clip)	All Chests
3	7750-xx	**Key Replacement** (xx = key code) (2 keys)	All Chests
4	7731	**Latch & Striker Kit** (1 latch, 1 striker, & mounting hardware)	All Chests
5	7106	**Striker Kit** (1 Striker and mounting hardware)	All Chests
6	7730	**Weather Strip Kit** (various styles for 1 box)	All Chests
7	615	**Tray** (1 tray plus dividers)	654-X-01, 655-X-01, 664-X-01, 665-X-01, 674-X-01, 675-X-01
7	617	**Tray** (1 tray plus dividers)	684-X-01, 685-X-01
8	7736	**Mounting Kit** (Not shown)	All Chests
9	7746	**Nameplate Kit** (3 stickers, 2 side bezels, 1 back bezel)	All Chests
10	7749	**Grommet Kit**	All Chests
11	7933-X	**Cover**	645-X-01
11	7934-X	**Cover**	655-X-01
11	7935-X	**Cover**	665-X-01
11	7936-X	**Cover**	675-X-01
11	7937-X	**Cover**	685-X-01
11	7942-X	**Cover**	644-X-01
11	7943-X	**Cover**	654-X-01
11	7944-X	**Cover**	664-X-01
11	7945-X	**Cover**	674-X-01
11	7946-X	**Cover**	684-X-01
12	7742	**Latch Rod Kit** (Not shown)	644-X-01, 645-X-01
12	7743	**Latch Rod Kit** (Not shown)	654-X-01,655-X-01
12	7744	**Latch Rod Kit** (Not shown)	664-X-01, 665-X-01,684-X-01,685-X-01
12	7745	**Latch Rod Kit** (Not shown)	674-X-01,675-X-01

Note: In the model numbers above, X represents the color code for your model; 0 = Clear, 3 = White, 5 = Black

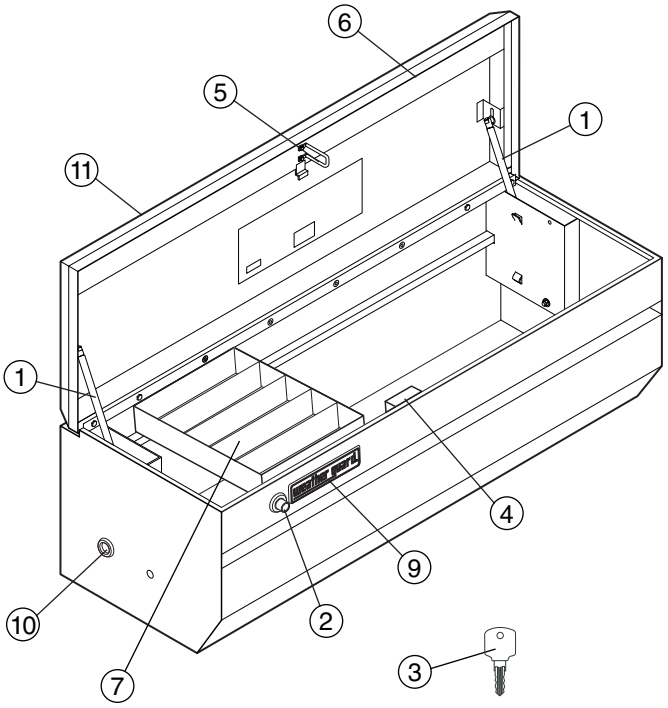

–NOTICE–

Any modification or unintended use of this product shall immediately void all manufacturers warranties. Manufacturer disclaims all liability for injuries to persons or property resulting from any modification to, or unintended use of this product.

LIMITED WARRANTY

This LIMITED WARRANTY is made by Knaack Manufacturing Company, 420 E. Terra Cotta Ave., Crystal Lake, Illinois to the original retail purchaser of KNAACK® or WEATHER GUARD® products.

KNAACK MANUFACTURING COMPANY WARRANTS THAT KNAACK OR WEATHER GUARD PRODUCTS WILL BE FREE FROM DEFECTS IN MATERIAL AND WORKMANSHIP FOR A PERIOD OF THREE (3) YEARS FROM DATE OF PURCHASE BY THE ORIGINAL RETAIL PURCHASER.

If, before the expiration of the Warranty period, purchaser discovers that the KNAACK or WEATHER GUARD product fails to fulfill the Warranty, purchaser shall contact Knaack Manufacturing Company to make arrangements for an inspection of the product. If Knaack Mfg. Co. determines a defect exists, Knaack Mfg. Co. shall, at its option and expense, repair or replace any defective part. All Warranty repairs shall be made by an authorized KNAACK Product dealer or Knaack Mfg. Co. approved service company.

This Warranty shall not apply if the KNAACK or WEATHER GUARD product has been subjected to misuse, abnormal service or handling, improper maintenance, or alterations made by anyone other than a KNAACK or WEATHER GUARD Product dealer or a Knaack Mfg. Co. approved service company.

THE WARRANTY PRINTED ABOVE IS THE ONLY WARRANTY APPLICABLE TO THIS PURCHASE. ALL OTHER WARRANTIES, EXPRESS OR IMPLIED, INCLUDING BUT NOT LIMITED TO THE IMPLIED WARRANTIES OF MERCHANTABILITY AND FITNESS FOR A PARTICULAR PURPOSE ARE HEREBY DISCLAIMED.

KNAACK MANUFACTURING COMPANY SHALL NOT BE LIABLE FOR ANY INCIDENTAL OR CONSEQUENTIAL DAMAGES ARISING OUT OF ANY BREACH OF THIS WARRANTY. NOR SHALL THE DAMAGES EXCEED THE RETURN AMOUNT OF THE PURCHASE PRICE PAID BY THE ORIGINAL PURCHASER.

This Warranty is in lieu of all Warranties express or implied. The terms of this Warranty shall not be modified by any party, their successors or assigns. This Warranty gives you specific legal rights, and you may also have other rights which vary from state to state.

Product fits based on vehicle design available at the revision date. Vehicle manufacturers may change specs after the revision date, so if you have a vehicle produced with a model year date after the revision date, please contact your distributor or Knaack Mfg. Co. to verify fitting of product to vehicle.

WEATHER GUARD Products are protected by one or more of the following patents: U.S. 5145087, 5308126, 4509787, 4573731, 4618083, D-346355, D-346994, D-353574; Canada 1218968, 1224230, 1235100 and; U.K. 2233036. Other patents pending.

KNAACK
MANUFACTURING COMPANY

KNAACK MANUFACTURING COMPANY
420 E. Terra Cotta Ave, Crystal Lake, IL 60014, 1-800-456-7865
WWW.WEATHERGUARD.COM
©2005 Knaack Manufacturing Company

Rev A 9/05 Part No. 24-0198

EMERSON™
Professional Tools