ASSEMBLY AND INSTALLATION INSTRUCTIONS
Accessory Tray - Models 200 and 202

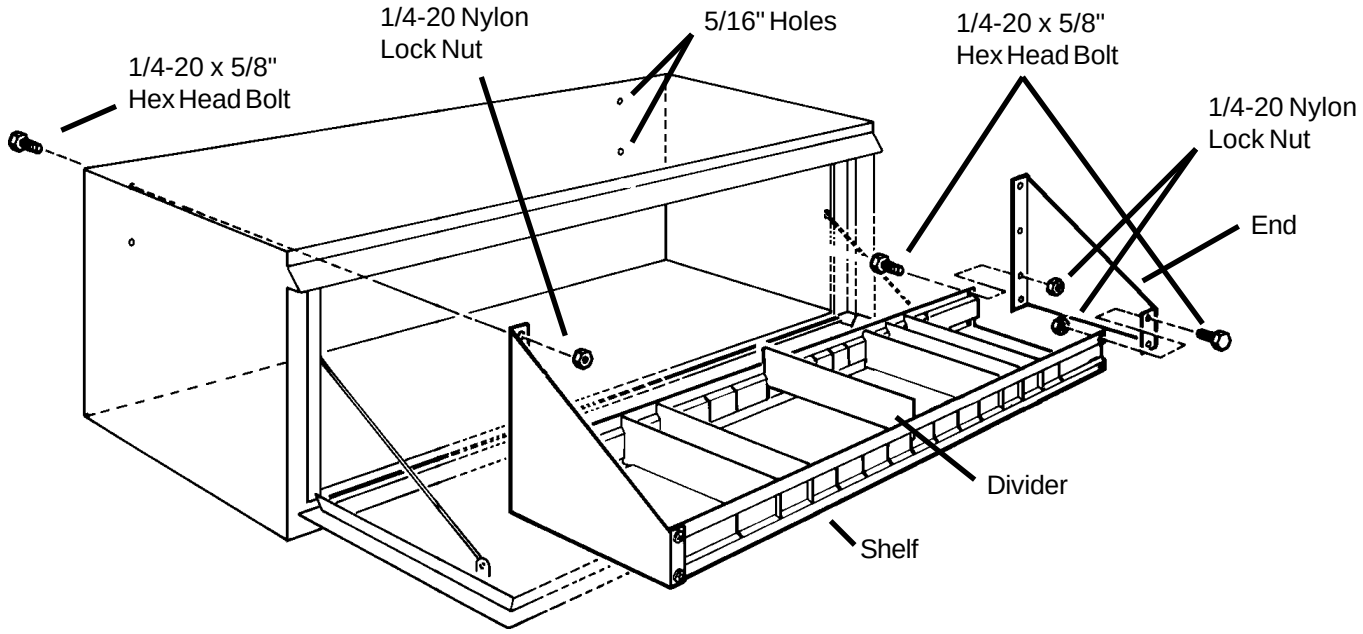

IMPORTANT
BEFORE YOU BEGIN

Read these instructions and warnings completely before installation.

⚠ DANGER

Danger of explosion. Do not use this product for storing or transporting flammables, explosives, hazardous materials, or hazardous waste, such as containers of gasoline, solvents, gun powder, dynamite, propane tanks, acetylene tanks and cutting torches. This product is only intended and safe for use in storing and transporting small tools, equipment and other similar materials. Any modifications made to, or unintended use of this product, could create a hazardous condition that can cause death, serious personal injury or property damage.

BOLT KIT (both models)

Bolt Kit #32-0177 is provided with your accessory tray. Check this bolt kit to be sure the following parts are included:

Quan.	Description
12	1/4-20 x 5/8" Hex Hd. Bolt
12	1/4-20 Nylon Lock Nut

PARTS LIST (both models)

- 1- Shelf
- 2- End Panels (left & right)
- 6- Shelf Dividers

TOOLS REQUIRED

- 7/16" Open or Box End Wrench (2)
- Electric Drill with 5/16" Drill Bit

Rev. A 12/94 Part No. 24-0200

weather guard®
DIVISION OF KNAACK MFG. CO.

ASSEMBLY INSTRUCTIONS

1. Assemble the two End Panels to the Shelf (nuts should be inside of shelf area as shown).

2. Place the assembled shelf unit into the Hi-Side box, centered in the door opening and raised toward the top of the box (so you will still have generous storage space under it). Mark through the two top mounting holes in each end panel.

⚠ CAUTION

To keep debris out of your eyes when drilling, always wear protective eyewear.

3. Remove the shelf unit and drill the hole locations.

4. Place the shelf unit into the side box and fasten.

5. Slide the six Shelf Dividers into any combination of shelf slots you find convenient to your needs.

-NOTICE-

Any modification or unintended use of this product shall immediately void all manufacturers warranties. Manufacturer disclaims all liability for injuries to persons or property resulting from any modification to, or unintended use of this product.

If you have any questions, please give us a call. **Call Toll Free 1-800-456-7865**

KNAACK MANUFACTURING COMPANY
420 E. TERRA COTTA AVENUE - CRYSTAL LAKE, ILLINOIS, 60014 - 815-459-6020
©1990 Knaack Manufacturing Company