weather guard®

TRUCK AND VAN EQUIPMENT

OPERATORS MANUAL

ALUMINUM LOW PROFILE SADDLE BOX
MODELS 121-X-01 THRU 131-X-01

WWW.WEATHERGUARD.COM

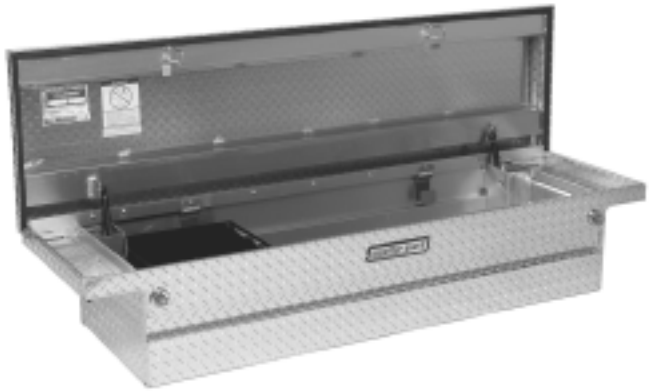

PRODUCT REGISTRATION

Model #:_____ Serial #:_____

For your convenience, place product registration tear-off sticker here

Purchase Date: _____
Place of Purchase: _____
Key Code: _____

INSTALLATION TIME

Approximate installation time: 30 minutes (1/2 hr.) depending on installer experience.

TOOLS REQUIRED

- 1/2" Ratchet Wrench
- Ruler

PARTS LIST

(1) Saddle Low Profile Box

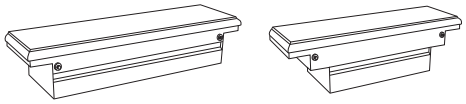

(2) Keys

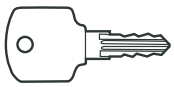

(1) Tray with Dividers

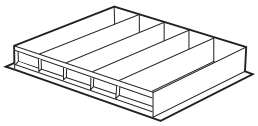

(4) 5/16”-18 x 2-1/4” Hex Head Bolts

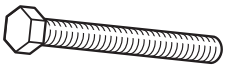

(2) Level Holder Brackets

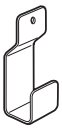

(4) Fender Washers

(2) Rubber Mounting Pads

Note: The rubber mounting pad comes as a single piece and must be separated into two pieces, one for each side of the truck.

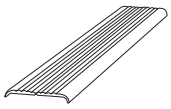

(4) Mounting Clamps

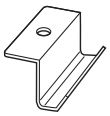

–ATTENTION–

Read and understand all instructions and warnings before operating or using this product.

⚠ DANGER

Danger of explosion. Do not use this product for storing or transporting flammables, explosives, hazardous materials, or hazardous waste, such as containers of gasoline, solvents, gun powder, dynamite, propane tanks, acetylene tanks and cutting torches. This product is only intended and safe for use in storing and transporting small tools, equipment and other similar materials. Any modifications made to, or unintended use of this product, could create a hazardous condition that can cause death, serious personal injury or property damage.

Rev. 2/06 Part No. 24-0206

INSTALLATION INSTRUCTIONS

Note:

- If your pickup is fitted with a plastic drop-in bed liner, it may need to be drilled, trimmed, or cut for proper installation of truck box.
- Truck box cover may not properly latch until box is fully bolted to truck bed (4) places.
- Because truck bed configurations vary, (6) mounting slots have been provided, to ensure the use of (4) mounting clamps.
- Periodically check tightness of mounting clamps to insure proper attachment.
- Use touch-up paint on any drill holes to prevent oxidation.
- Install boxes with vehicle parked on level ground.

Step 1: LOCATE BOX IN TRUCK BED

- Place rubber mounting pads on bed rails.
- Place box into position on top of mounting pads.
- Use ruler to ensure box is centered in truck bed, and that cover opens fully without interference.

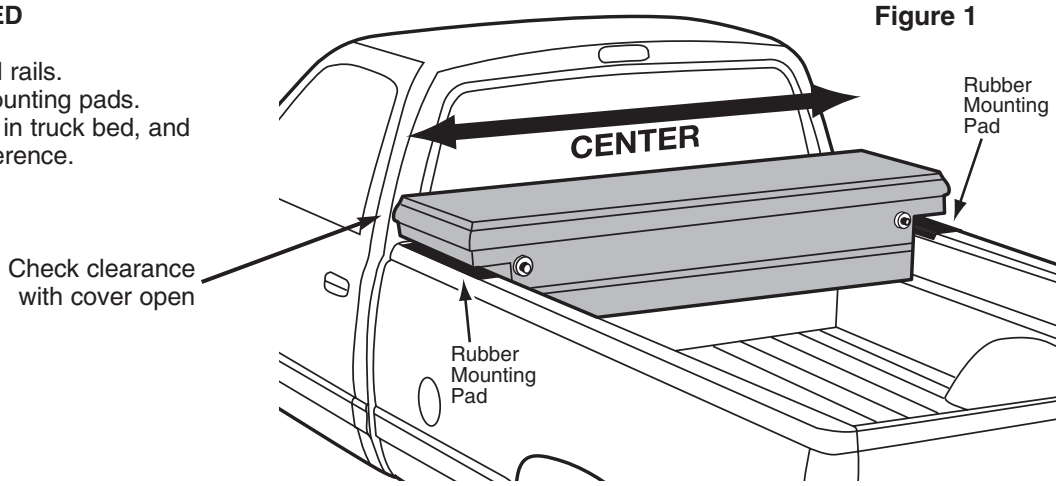

Figure 1

Step 2: ATTACH BOX TO TRUCK BED

- Attach mounting clamp, bolts and washers as shown in Figure 2.
- Start with slot at drivers side front and work clock-wise until all four clamps have been installed.

Note: Mounting clamp bolt may be difficult to turn due to the "lock nut" feature. Apply a small amount of grease to bolt threads prior to installation to ease assembly.

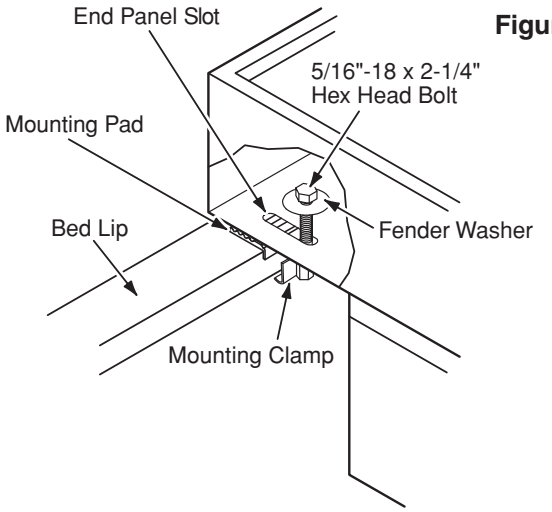

Figure 2

FEATURE OPERATION

NEW!

LOCK SYSTEM

The WEATHER GUARD® Lock is designed to provide maximum security, while providing ease of use and years of reliable service. When in the locked mode, the button remains retracted in a tamper-resistant position. When the button is pressed in the unlock mode, the latches are activated and the cover opens.

LOCK

Turn the key counterclockwise to the locked position as indicated on the lock bezel. When the button is now pressed, it will stay in the retracted or tamper-resistant position until unlocked.

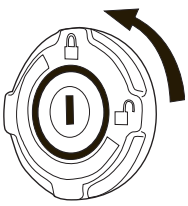

UN-LOCKED

Turn the key clockwise to the unlocked position as indicated on the lock bezel. Button will pop out and is now ready to release the latches when pressed.

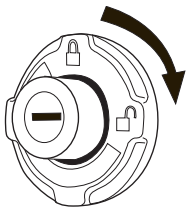

NEW!

LATCH SYSTEM

The WEATHER GUARD® Latch System utilizes automotive grade latches in conjunction with high strength latch strikers to ensure maximum security. The Weather Guard Latch System is designed to open with a single touch of the button, and close securely. Expect years of reliable service from the WEATHER GUARD® Latch System with only minimal maintenance: Lubricate latch pivot points bi-Annually with white grease. If latch strikers are accidentally knocked out of alignment, simply use a mallet to re-align.

NEW!

12V ELECTRICAL ACCESS

WEATHER GUARD® Truck Boxes are equipped with a 12 volt electrical access grommet for easy electrical accessory fit-ups. To use, simply cut along one or more perforations in the rubber grommet and run wire through.

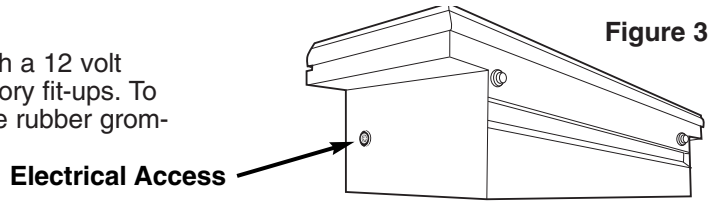

Figure 3

⚠ WARNING

To prevent electric shock, explosion, fire and/or serious personal injury when using saddle/cross box with:

Extension Cord -

- Follow all Extension Cord manufacturer's Warnings and Instructions.
- Do NOT insert extension cord through hole without grommet in place (see Figure 3).
- Only use a three-wire extension cord with all three prongs intact. Never remove the round grounding prong.
- Extension cord must be connected to a 120 Volt GFCI protected outlet with proper ground. If GFCI outlet is not available, use an extension cord with GFCI protection built in.
- Check the insulation and plugs of extension cord before using. Do NOT use cord if it is worn or damaged.
- Do NOT overload extension cord.
- Remove extension cord from the grommet hole before moving or transporting saddle/cross box.
- Only use an extension cord that is rated for outdoor use.
- Do NOT connect extension cord to outlet that also supplies critical safety equipment with power.

Cordless Power Tool Battery Chargers -

- See Charger's Owner's Manual for proper use and care of charger and batteries. Follow all Warnings and Instructions provided with your battery charger.
- Place chargers and electrical connections in tray.
- Chargers are Dry location use only. Do NOT expose to liquid, vapor, or rain. Should your charger become wet, Do NOT attempt to use. Unplug extension cord from supply before handling wet charger or cords.
- Only use chargers and batteries that are intact and operating properly.
- Do NOT touch metal prongs when plugging charger into extension cord.
- Keep flammable materials like paper or rags away from charger, cords or connections.
- Do NOT place or attempt to charge lead acid, car type batteries in saddle/cross box.

NEW!

LEVEL HOLDER

WEATHER GUARD® Saddle Boxes are equipped with brackets that allow safe and easy storage of levels. Install using existing bolts per Figure 4.

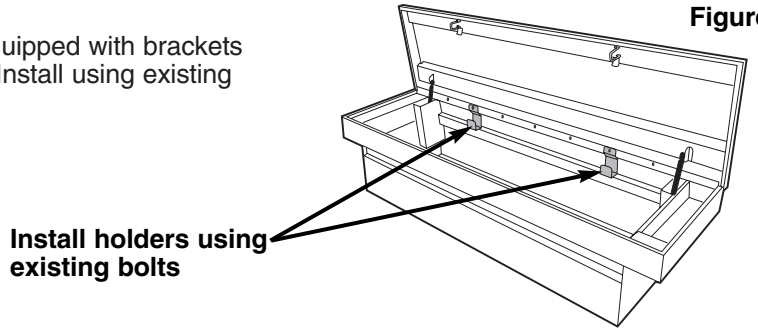

Figure 4

NEW!

MOUNTING BRACKETS

Wide flange mounting bolts provide secure mounting without crimping bed rails and allow full unobstructed use of side pockets.

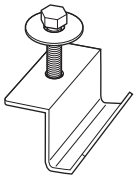

SERVICE PARTS

FOR REPLACEMENT PARTS GO TO WWW.WEATHERGUARD.COM

ITEM NO.	PART NO.	DESCRIPTION	FITS MODEL #
1	7009	**Gas Spring**	121-X-01, 131-X-01
2	7748-XX	**Lock & Key Set** (XX = key code) (1 lock, 2 keys, retainer clip)	All Saddle / Cross
3	7750-XX	**Key Replacement** (XX = key code) (2 keys)	All Saddle / Cross
4	7731	**Latch & Striker Kit** (1 latch, 1 striker, & mounting hardware)	All Saddle
5	7106	**Striker Kit** (1 striker and mounting hardware)	All Saddle / Cross
6	7730	**Weather Strip Kit** (various styles for 1 box)	All Saddle / Cross
7	615	**Tray** (1 tray plus dividers)	121-X-01, 131-X-01
8	7733	**Mounting Kit** (4 mounting clamps, 4 bolts, 4 washers, 2 mount pads)	All Saddle / Cross
9	7737	**Level Holder** (2 Brackets)	121-X-01, 131-X-01
10	7746	**Nameplate Kit** (3 stickers, 2 side bezels, 1 back bezel)	All Saddle / Cross
11	7749	**Grommet Kit**	All Saddle / Cross
12	7950-X	**Cover**	121-X-01
12	7952-X	**Cover**	131-X-01
13	7951	**Latch Rod Kit** (Not Shown)	121-X-01
13	7953	**Latch Rod Kit** (Not Shown)	131-X-01

Note: In the model numbers above, X represents the color code for your model; 0 = Clear, 3= White, 5 = Black

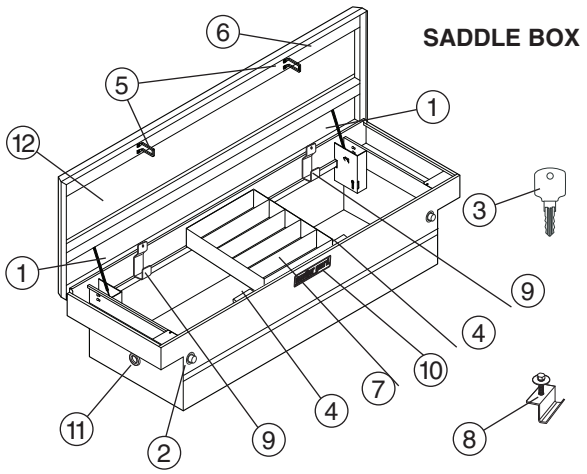

–NOTICE–

Any modification or unintended use of this product shall immediately void all manufacturers warranties. Manufacturer disclaims all liability for injuries to persons or property resulting from any modification to, or unintended use of this product.

LIMITED WARRANTY

This LIMITED WARRANTY is made by Knaack Manufacturing Company, 420 E. Terra Cotta Ave., Crystal Lake, Illinois to the original retail purchaser of KNAACK® or WEATHER GUARD® products.

KNAACK MANUFACTURING COMPANY WARRANTS THAT KNAACK OR WEATHER GUARD PRODUCTS WILL BE FREE FROM DEFECTS IN MATERIAL AND WORKMANSHIP FOR A PERIOD OF THREE (3) YEARS FROM DATE OF PURCHASE BY THE ORIGINAL RETAIL PURCHASER.

If, before the expiration of the Warranty period, purchaser discovers that the KNAACK or WEATHER GUARD product fails to fulfill the Warranty, purchaser shall contact Knaack Manufacturing Company to make arrangements for an inspection of the product. If Knaack Mfg. Co. determines a defect exists, Knaack Mfg. Co. shall, at its option and expense, repair or replace any defective part. All Warranty repairs shall be made by an authorized KNAACK Product dealer or Knaack Mfg. Co. approved service company.

This Warranty shall not apply if the KNAACK or WEATHER GUARD product has been subjected to misuse, abnormal service or handling, improper maintenance, or alterations made by anyone other than a KNAACK or WEATHER GUARD Product dealer or a Knaack Mfg. Co. approved service company.

THE WARRANTY PRINTED ABOVE IS THE ONLY WARRANTY APPLICABLE TO THIS PURCHASE. ALL OTHER WARRANTIES, EXPRESS OR IMPLIED, INCLUDING BUT NOT LIMITED TO THE IMPLIED WARRANTIES OF MERCHANTABILITY AND FITNESS FOR A PARTICULAR PURPOSE ARE HEREBY DISCLAIMED.

KNAACK MANUFACTURING COMPANY SHALL NOT BE LIABLE FOR ANY INCIDENTAL OR CONSEQUENTIAL DAMAGES ARISING OUT OF ANY BREACH OF THIS WARRANTY. NOR SHALL THE DAMAGES EXCEED THE RETURN AMOUNT OF THE PURCHASE PRICE PAID BY THE ORIGINAL PURCHASER.

This Warranty is in lieu of all Warranties express or implied. The terms of this Warranty shall not be modified by any party, their successors or assigns. This Warranty gives you specific legal rights, and you may also have other rights which vary from state to state.

Product fits based on vehicle design available at the revision date. Vehicle manufacturers may change specs after the revision date, so if you have a vehicle produced with a model year date after the revision date, please contact your distributor or Knaack Mfg. Co. to verify fitting of product to vehicle.

WEATHER GUARD Products are protected by one or more of the following patents: U.S. 5145087, 5308126, 4509787, 4573731, 4618083, D-346355, D-346994, D-353574; Canada 1218968, 1224230, 1235100 and; U.K. 2233036. Other patents pending.

KNAACK MANUFACTURING COMPANY
420 E. Terra Cotta Ave, Crystal Lake, IL 60014, 1-800-456-7865
WWW.WEATHERGUARD.COM
©2005 Knaack Manufacturing Company

Rev. 2/06 Part No. 24-0206

KNAACK MANUFACTURING COMPANY

EMERSON Professional Tools